OASIS

3D METROLOGY ▾ OPTICAL ALIGNMENT
MECHANICAL SERVICES

One call. One team.
Problem solved.

Machine Alignment Handbook

What it is, how to do it and why you should.

Published by OASIS Alignment Services, Inc. 2013

Table of Contents

About the Author

Hubert Meagher, B. Eng, spent many years in the field as an Alignment Engineer specializing in precision measurement prior to his role as Director of Metrology Services at OASIS Alignment Services, Inc. (OASIS). He is an expert in using both optical tooling and portable metrology tools in manufacturing facilities.

Mr. Meagher was instrumental in researching and developing the 3-Dimensional Metrology Services segment of OASIS and has been heavily involved with testing the use of laser trackers, coordinate measuring arms and laser scanners in industrial environments.

Mr. Meagher earned his Bachelor of Mechanical Engineering from Carleton University in Ottawa, ON.

He can be reached at hubert.meagher@oasisalignment.com.

"My production department tells me that we need to have our machine aligned."

You can take your car to the tire shop and get your wheels aligned, but how do you get your machine aligned? And what does alignment really mean? Alignment technicians typically come to the shop floor and setup fancy instruments to take measurements on all parts of the machine in order to get things to run properly.

Machine alignment is one of those "black magic", specialty technical services that some maintenance managers like to avoid. However, when something goes wrong, it is much better to have an understanding of alignment, than to not.

Wouldn't it be nice if someone could explain the theory of alignment and then apply it to machine alignment in layman's terms?

"What do those numbers and pictures on alignment reports really mean? Can they measure my machine while in operation? How do I know that what these alignment technicians are doing is the right thing and why do I need alignment professionals anyway?"

Let's see if we can answer some of those questions.

What Is Alignment?

Okay, so this might get a little technically heavy on the next couple of pages, but bear with me – it lightens up when we get to applying it to machine alignment - or you can skip to page 8!

The many uses of the word "alignment" describe a structure between objects, ideas, or people. When mechanics use the word alignment, they generally mean the relationship between one mechanical component and another. In a three dimensional world, that implies that the component relationship is described in a way that leaves no degrees of freedom unaccounted for.

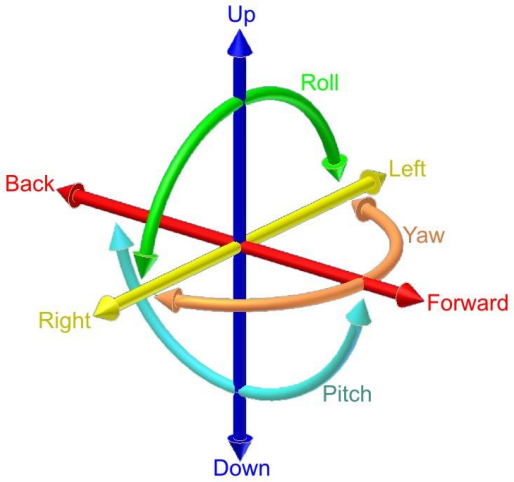

Figure 1: The six degrees of freedom: forward/back, up/down, left/right, pitch, yaw, roll. (via Wikipedia http://en.wikipedia.org/wiki/Six_degrees_of_freedom)

Although there may be other degrees of freedom affecting a body (such as thermal growth, compressibility, and nuclear decay) they can usually be neglected. The question is, “How do you describe the relationship between the geometric bodies?”

The invention of Cartesian coordinates in the 17th century by René Descartes (Latinized name: Cartesius) revolutionized mathematics by providing the first systematic link between Euclidean geometry and algebra. Using the Cartesian coordinate system, geometric shapes (such as curves) can be described by Cartesian equations. Cartesian coordinates are the foundation of analytic geometry, and provide enlightening geometric interpretations for many other branches of mathematics, such as linear algebra, complex analysis, differential geometry, multivariate calculus, group theory, and more. Cartesian coordinates are also essential tools for most applied disciplines that deal with geometry, including astronomy, physics, engineering, and many more.[1]

With a way to calculate the relationship between bodies in finite directions of translation and rotation, we can now describe that relationship in standard form. A body who's centroid is described as (x, y, z), (i, j, k) in relation to a known datum or another body that is at (a, b, c), (u, v, w), can be located in relative space using simple geometry and mathematics.

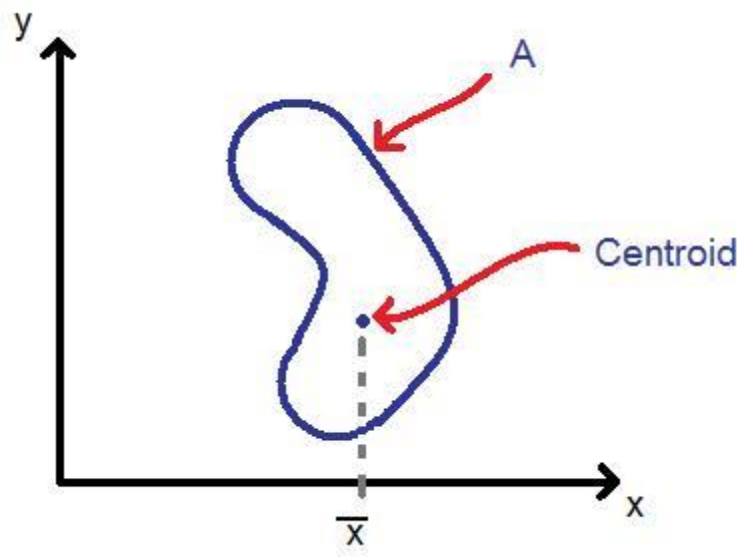

Figure 2: Centroid of a blog (via Wikimedia Commons http://commons.wikimedia.org/wiki/File:HW5_centroid.jpg)

So how do we use this knowledge in a practical way, in everyday life, as a maintenance or project engineer? A body's centroid is not a very practical thing to use as a measurement point. Determining its orientation in space is impossible. And what is the datum or the other body?

[1] Courtesy of Wikipedia: http://en.wikipedia.org/wiki/Cartesian_coordinate_system

The key is to choose components of the body that can be measured practically and can also be described as a single point, or a relation of single points. This concept is called *point reducibility*. Point reducibility is the point resulting from a more complex measurement. For example, measuring a circle yields a center point; measuring a cylinder yields two end points; or measuring three intersecting planes yields a corner point. If the body can be described by a vector (or the relationship of two distinct points that form a vector) relative to another body or datum described in the same way, then the problem with describing alignment is solved.

What's more, if a series of bodies is described by similar vectors relative to the same common reference body's vector or datum, then the alignment of those bodies can be described as well. In other words, if we can do away with all the complex vectorial mathematics and relate the position of a body by comparing two points, it makes interpreting alignment a lot simpler. Furthermore, if we make one of those points zero, then the comprehension of the alignment is that much easier.

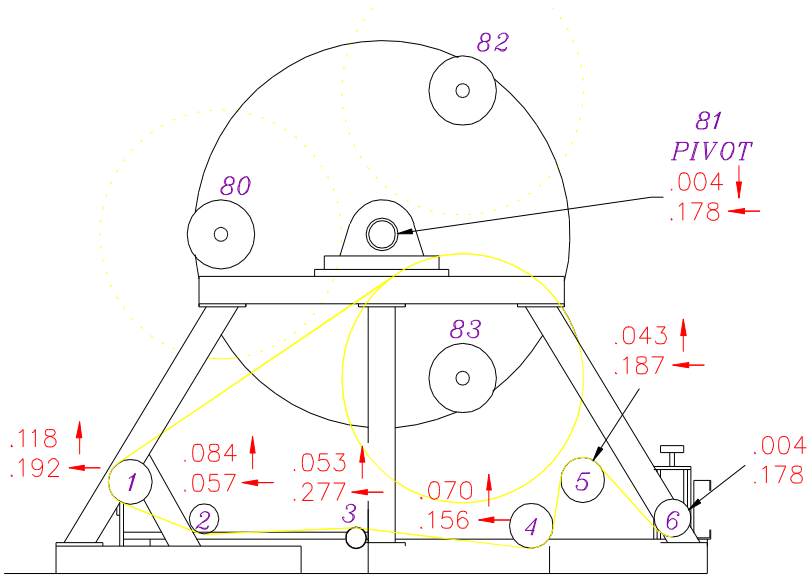

Figure 3: Alignment of several rolls in a machine described only by the front side center points relative to the back side.

Practically speaking, there are two types of alignment we need to be concerned with when dealing with bodies in relative space. The bodies need to be located relative to each other and at a specified angle to each other. We can expand this generalization into two common categories of alignment; parallelism and perpendicularity. In either case the component being aligned can be described using a point's coordinates and the relative position of a second point.

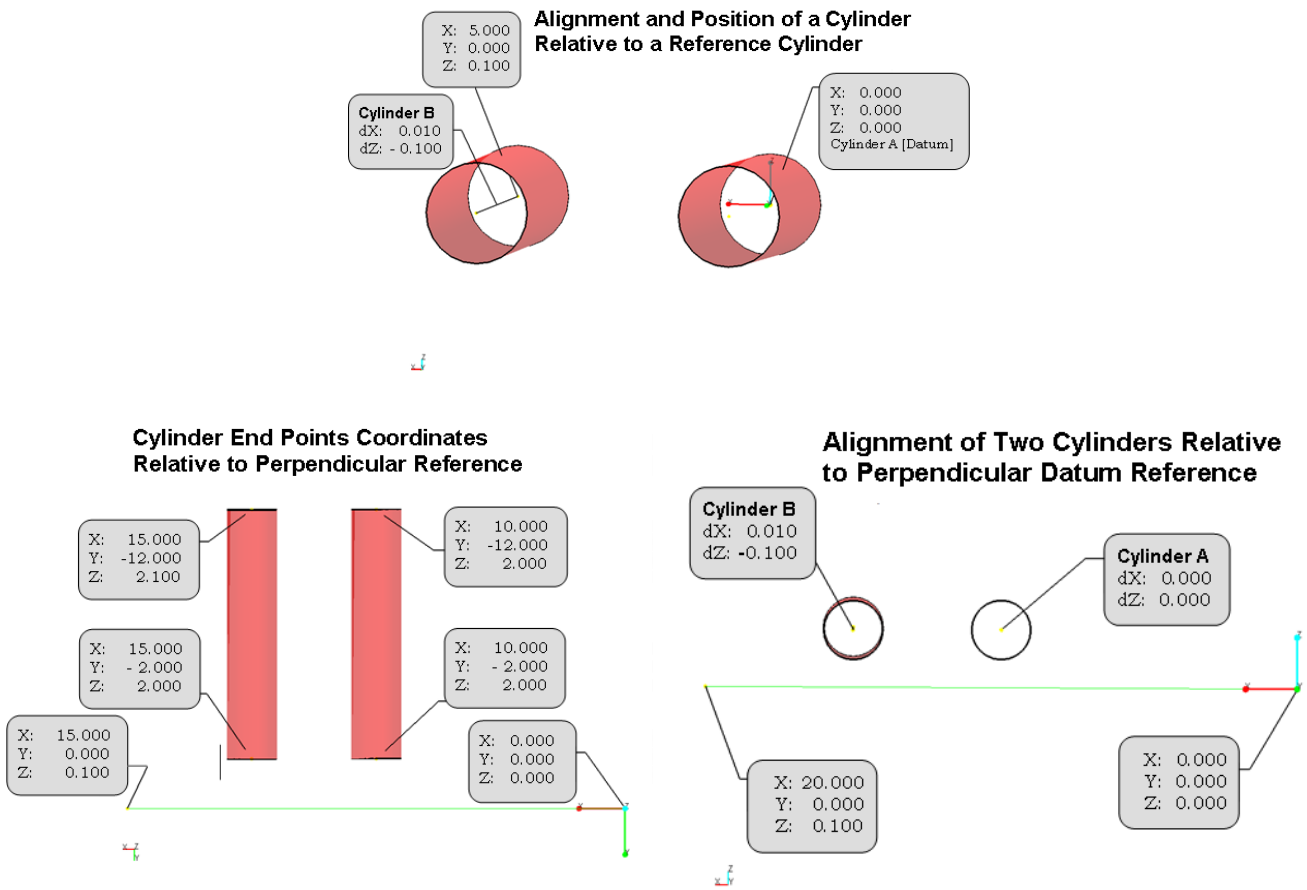

Figure 4: Alignment of two cylinders as described by their end points.

The way we actually measure the points on these individual bodies is by measuring point reducible features. In *Figure 4* for example, cylinders are reduced to two end points. We could measure one end of a side frame piece at a specific location relative to the other end to report its alignment in the horizontal attribute (square) or the top of a frame piece to find the vertical alignment (or level). Another example would be to mathematically extract the ends from a cylinder shape constructed from a series of measurements using a portable coordinate measuring machine such as laser tracker (*see Figure 5)*.

The same cylinder could also be measured and located using specific horizontal and vertical tangential offset measurements using an optical transit or theodolite and precision scales. In either case, the two specific points can then be compared to each other to determine their alignment in the Cartesian coordinates of choice as shown in *Figure 4*. With the proper instruments, some knowledge of the

parts, machines, or bodies being measured – and some creativity – almost anything can be aligned.

Figure 5: Laser trackers are portable, 3-dimensional metrology tools that are used for collecting large volume 3D measurements quickly, accurately and in real-time.

Why Level Machines?

What is level? Level is an imaginary plane level to Earth at any particular tangential point on our planet. Due to Earth's gravity (which is approximately normal to the curvature of the Earth) the level plane can be measured quite easily by several methods.

Figure 6: Spirit level (via Wikimedia Commons http://commons.wikimedia.org/wiki/File:Stiefelmayer_engineers_spirit_level.jpg)

A very crude but effective way to measure level is by using columns of water. Communicating vessels will come to static equilibrium, hence forcing the columns of water to the same level. A simple vial level (sometimes referred to as a tubular spirit level) can only measure gravity in one direction. Vials can be combined to measure more than one direction at a time. A circular bull's eye level can achieve measurement of the level plane unilaterally. All of the latter require the intervention of the human eye to interpret the level condition.

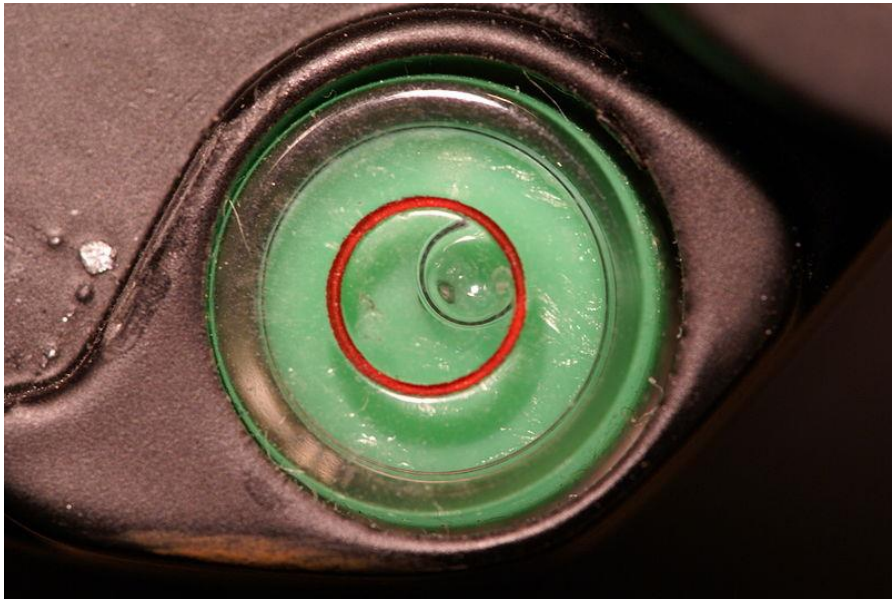

Figure 7: Green bull's eye level (unlevel) (via Wikimedia Commons http://commons.wikimedia.org/wiki/File:Green_bull%27s_eye_level_(unlevel).jpg)

More sophisticated ways of measuring the level plane are pendulums, digital inclinometers, accelerometers, and optical levels. The optical level is commonly used in industry to measure elevations between points by using Earth's level as a reference (or constant). By calibrating the level vial to the optical line of sight, targets can be sighted and measured compared to the level plane.

But why do we need to measure level? In most cases, we actually don't need Earth's level as a reference for the process itself, but we do need it as a reference for the measurement devices. Optical instruments rely on the level plane to ensure continuity between devices and between device positions. It is a constant and universal reference that can be used by most types of optical instruments and laser trackers.

The Common Reference

Level is a universal reference that is consistent everywhere on the machine. The problem has always been trying to establish a reference for the other attributes of the alignment equation. It is quite simple and sometimes a lot quicker to base the alignment of one component on another. When the parallelism of those two components is essential, then the relative alignment method is adequate. However, when the alignment of an entire machine is considered, basing the alignment of an entire line on adjacent components can lead to substantial accumulation of error. Even basing the alignment of components to one component is risky if that datum component is not truly representative of the machine's average alignment.

A much better approach to parallelism alignment is to base every measurement on a common reference. A common reference is a reference that can be used anywhere on the machine. Using optical instruments, a typical reference for parallelism alignment is an offset baseline. Using a laser tracker, a common reference is comprised of an array of reference targets all measured from a unique location. Determining the best offset baseline is the result of a statistical analysis of the individual centerlines of the components of the machine. The trend line found as a result

of a centerline survey determines the best-fit centerline and hence the offset baseline. Of course, if a machine is properly erected from scratch using a centerline and a parallel offset baseline, the need to find the best-fit centerline is not required.

Unfortunately, target locations, comprised of brass or steel monuments, are often left unprotected and therefore subject to damage or destruction. The best baseline monuments are made of stainless steel and include a target locator and protective cover. Optical filer targets or laser tracker tooling is inserted in the locator whenever the reference target must be read.

The know-how and expertise required to properly assess a machine's centerline is crucial to proper alignment. Independent of the metrology tooling used, the basic principles required to properly align machines are the same.

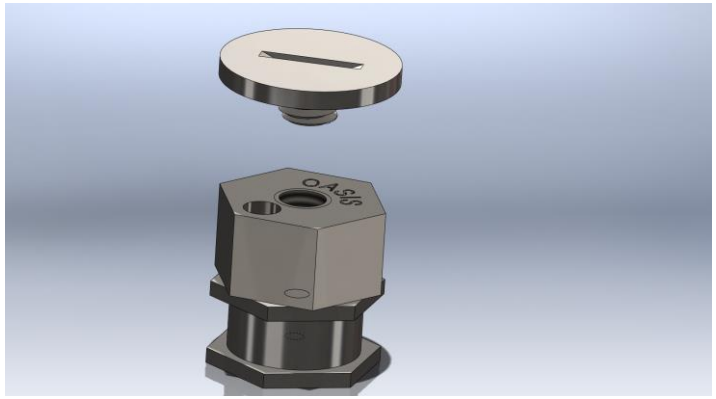

Figure 8: Stainless Steel Target Bushing monument with cover.

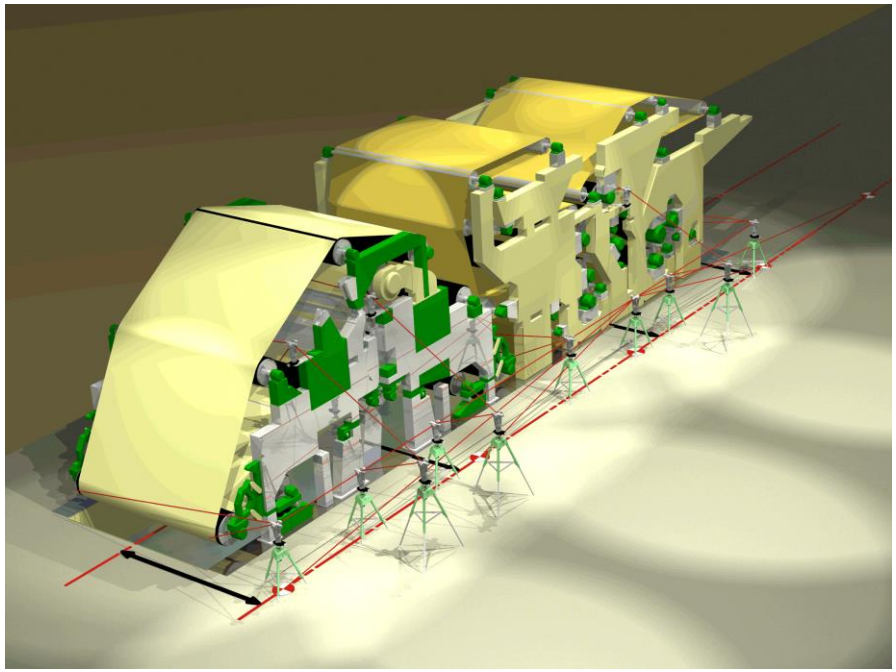

Figure 9: Optical transit squares used to inspect relative to machine reference.

Location, Location, Location

One of the most common tasks involving machinery alignment is locating machine components during installation. The erection process of a large or complex machine can be a daunting task. In some cases, the process involves thousands of components that fit perfectly together on the design engineer's CAD software, but in reality are subject to real world conditions on the shop floor.

It is critical to establish proper alignment foundations in order to succeed throughout the remainder of the project. Properly levelled and positioned sole plates, an elevation benchmark, a reliable centerline, an offset baseline, and cross-machine reference points are dimensional metrology features that will ensure that a project's alignment is successful from beginning to end. Many times, inadequate alignment preparation leads to project overruns caused by failures to fit and resulting reworks. On a more serious note, situations with inadequate references can lead to improper alignment of a machine line and cause severe production issues.

The ability to prepare parts for assembly ahead of time is a huge time-saver. However, machine manufacturers and mechanical contractors have traditionally shied away from this due to the numerous variables at assembly time. More often than not, sole plates and other machine components are field-drilled and tapped only after the machine has initially been positioned and pre-aligned. This practice is very inefficient and rather unsafe.

With the advent of more sophisticated 3D measurement systems such as the laser tracker, engineers and technicians can now locate exactly, and with confidence, the position of holes to be drilled and tapped, anchors to be positioned, structural components to be welded, and various features to be positioned without using cumbersome templates, or pre-positioning very heavy and difficult to maneuver parts. Bolts, holes, and anchors – whether alone or in patterns – can very quickly be located and marked by a single person after being laid out in a CAD model of the assembly.

Using sophisticated dimensional metrology methods and instruments, machines can be located precisely and reliably on the shop floor. Whether a machine is being erected from scratch or a section of an existing machine is being rebuilt, the benefits of properly planning where all of the components will be situated and properly executing the work are critical to a successful project.

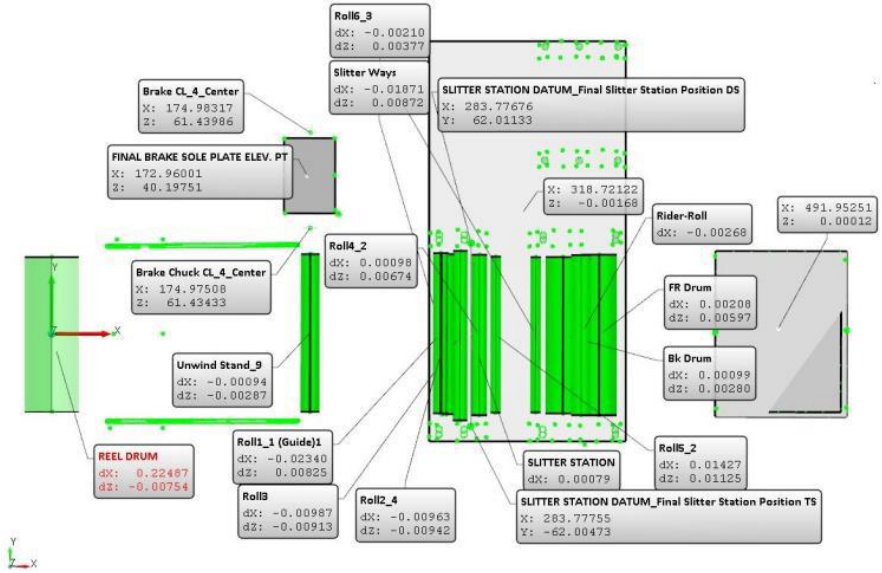

Figure 10: Global layout and alignment of soleplates and machine components analysis using advanced 3D metrology software.

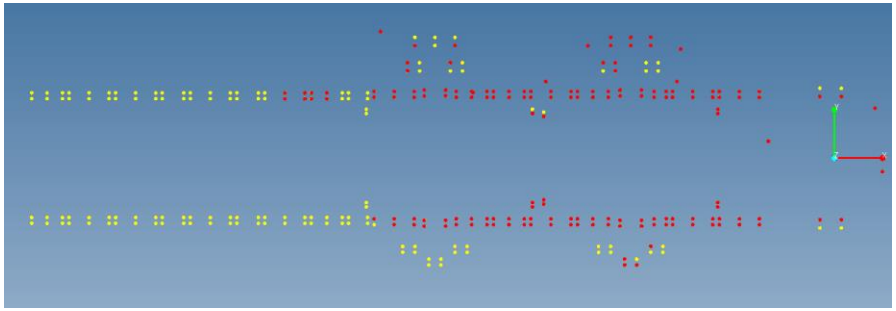

Figure 11: Machine foundation fixator locations using Laser Tracker.

Geometry

One of the more complicated problems in dimensional metrology has traditionally been measuring or locating components for their true position in space relative to one another. Alignment conditions with respect to individual components and their relation to a common reference was overcome a long time ago using levels, Theodolites, and transits. However, the exact vector in three dimensions between components involves many different set-ups and some very complex methods (not to mention some pretty acrobatic scale holding at times).

With the arrival of reliable CAD software-driven 3D measurement systems, inspecting and locating components to precise and sometimes complex geometries in space is now possible. Machine designers and operators can now require tighter tolerances on geometry and truly begin to understand the impact and/or benefits of positioning their equipment to true positions.

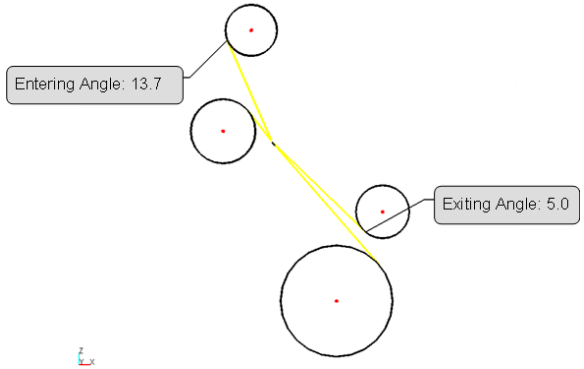

Figure 12: Lead-in and lead-out angles of web process.

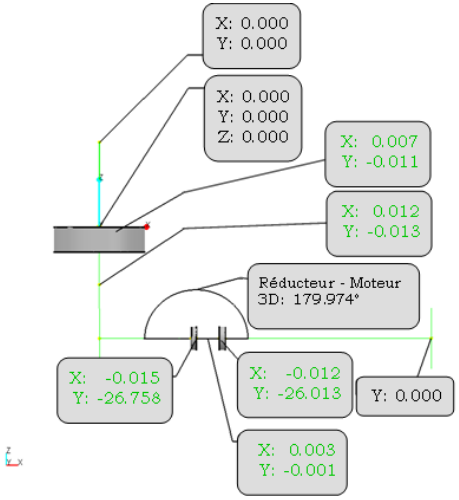

Figure 13: Right angle drive and clutch assembly alignment.

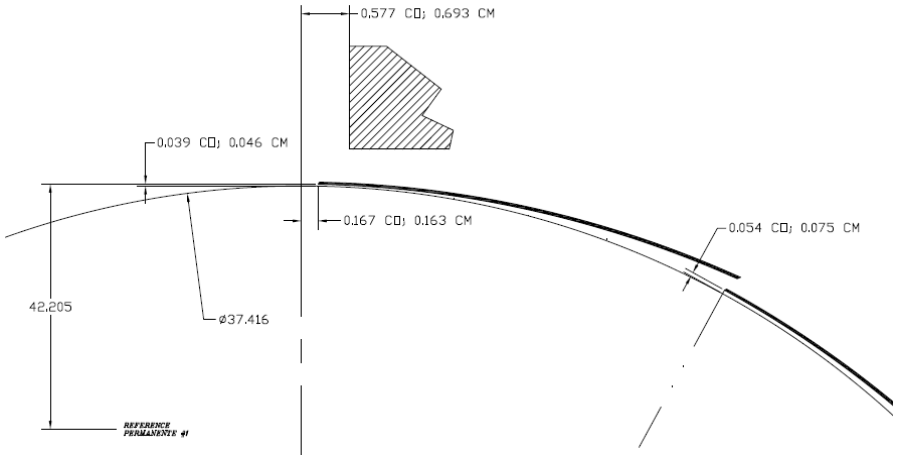

Figure 14: Ballistic jet geometry of paper machine headbox.

Clearances, distances, and angles are critical to the assembly of machine components or connection of a series of machines. 3D metrology methods and technologies can now ensure that fits and processes are optimal.

As-built History

As machines age, like living things they can change. Most mechanical systems are dynamic and constantly settling. Wear, vibration, and operational loads and impacts can continuously change their alignment conditions.

In order to investigate potential causes of changes in mechanical and/or machine performance, it is extremely useful to have the complete history of all the alignment work performed on the machine. All alignment work performed should be followed by a detailed report that is sequentially archived, allowing maintenance engineers to retrace and debug potential problems. Reports should be standardized and comprehensible to allow “non-alignment” people to understand the work performed and the actions taken. In today’s electronic age, alignment history can be easily archived and shared over networks.

Preventive Maintenance

Preventive (as opposed to reactive) maintenance is a very logical path. However, it is not always the way companies choose to manage their assets. Whenever possible, machine alignment should be part of preventive maintenance budgets, both in terms of down time and dollars. It has long been proven that well-aligned machines benefit from many mechanical and process factors. In some industries, alignment is even part of a predictive maintenance regime.

How to Align Machines

Different Types of Machines; Different Types of Alignment

In industry, the requirements for alignment are numerous. From shaft alignment to satellite antenna alignment to roll alignment, engineers and technicians benefit from a wide range of technologies and methods to accomplish their measurement and alignment needs.

Shaft Alignment

One very common application in industry is coupling or shaft alignment. For maintenance and economical purposes, it would be very impractical for a pump and motor to be constructed using a common shaft. Motors (or the driving side of a propulsion system) are usually self-contained and easily replaceable. However, that leaves a joint in the drivetrain.

If the alignment between the components was perfect to begin with and remained perfect during the life of the components, then there would be no issue. However, when misalignment exists, a rigid coupling is extremely susceptible to fatigue failure due to the high number of cycles of bending imparted on the shafts. For this reason, flexible couplings are normally used between machine components.

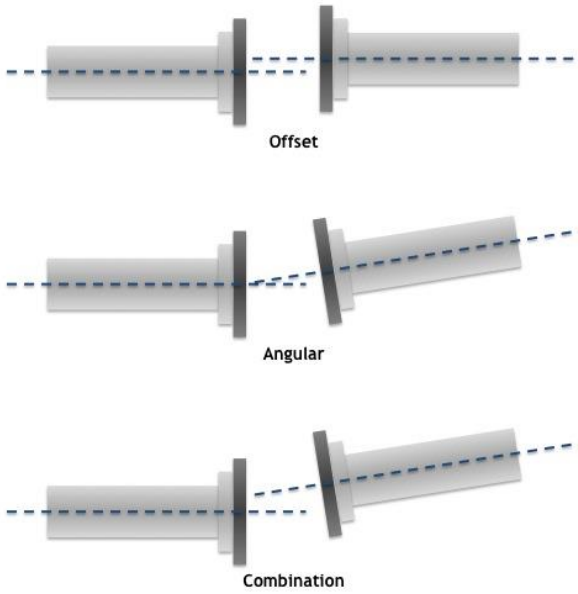

Figure 16: Types of shaft alignment.

Couplings are mechanical devices with moving parts that are activated with every cycle. Depending on the type of coupling (usually determined by the speed and loading requirements), tolerances can vary dramatically. Some couplings are more forgiving in the radial direction while others can take more angular misalignment. Generally speaking, the greater the misalignment, the greater the movements of the parts within the coupling will be and hence the greater the wear will be.

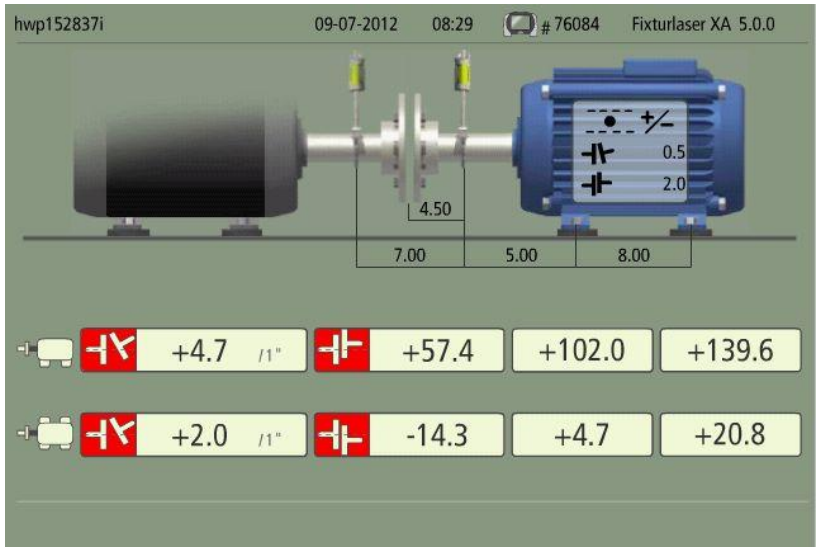

Figure 17: Coupling alignment results using Fixturlaser XA laser shaft alignment system.

So it stands to reason that the better the alignment, the longer the coupling life. Although couplings exist to reduce the need for perfect alignment, for the most part it is critical for the driver and the driven within machine drives to be aligned to ensure coupling life. Coupling alignment can be achieved in many ways using several different techniques, including mechanical, optical, and laser. Mechanical methods, using dial indicators, parallel bars, and feeler gauges are battle tested and proven.

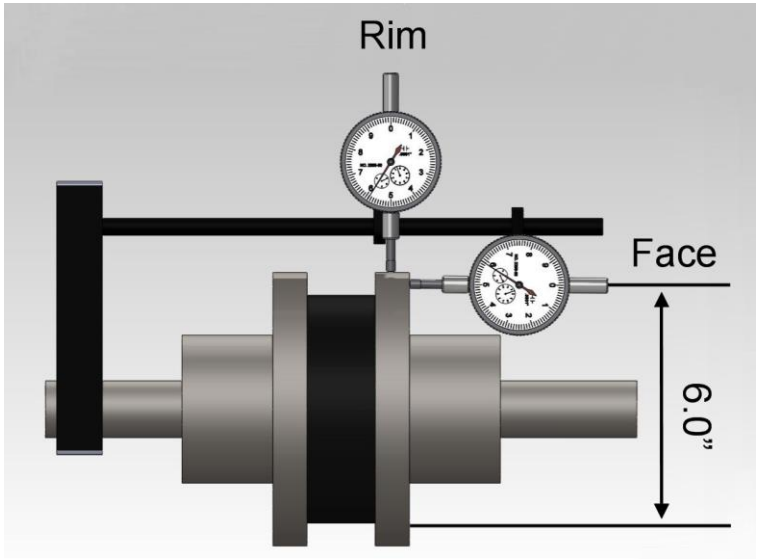

Figure 18: Coupling alignment by mechanical methods

However, they rely 100% on human interpretation of the data and can be time-consuming. Optical methods are often used when components are separated by guards and/or large distances, or large offsets are involved (as with universal joint type shafts). Optical methods require a certain expertise and depend 100% on humans to interpret the data and calculate the alignments. Today, laser shaft alignment

systems are most often used to align different types of industrial shaft and drive systems. Operators only need to enter geometric parameters and typically partially rotate the components to allow the computer to calculate the alignment and corrective parameters.

Roll Alignment

Web processes with rollers guiding product through a machine are another sector of industry where alignment is crucial. Roll alignment has been instrumental throughout the years in the evolution of alignment techniques. The parallelism of rolls is essential for many different reasons including product stability, product quality, and machine reliability.

Rolls can be made parallel by different methods including mechanical, optical, and laser. The benefits of proper roll alignment and maintenance are widely known and proven in the pulp & paper industry, web printing, blown film and plastics, and many other web driven industries such as aluminum foil, metallizing, coating, and even construction materials.

Figure 19: Effects of misalignment on web processes.

Rotating Machinery Alignment

Many machines rely on very closely fitting component to accomplish their processes. Plastic extruders, steam or gas turbines, pumps and compressors, and many other systems require very specific and uniform gaps between components. The concentricity of the components is critical to these machines and can be aligned using mechanical, optical, and laser methods.

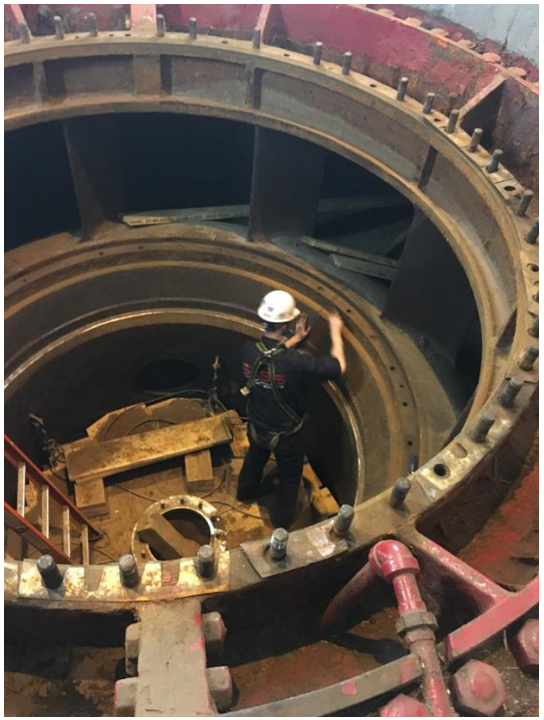

Figure 20: OASIS engineer aligns turbine components using laser tracker.

Other Industries and Processes

Other industrial processes and machines require alignment as well. Quite often these requirements can be challenging. Good examples are machine tools and assembly tooling. In the automobile and aeronautical industries, many assembly jigs are required to assemble subcomponents and entire assemblies. These tools have very closely controlled tooling points and surfaces to ensure the proper assembly and product quality. It used to be that jigs and tools were aligned using optical methods. However, with the advent of the 3-dimensional capabilities of laser trackers, they have become the standard.

Large machine tools also need to be set up properly and periodic calibration is also required. Optical and laser methods are used to ensure that the basic components of these large, precise tools are operating as they should. Software compensations must be used to further refine the calibration of machine tools that are used to machine parts to tighter tolerances than traditional alignment inspection tools can measure. Known dimensional artifacts, extremely precise linear encoders, laser interferometers, and machine characteristics such as backlash and drive inertia determine the software compensation parameters that need to be input in the controller. The machine tool’s software controller then compounds these parameters with its programmed tool path to precisely machine parts.

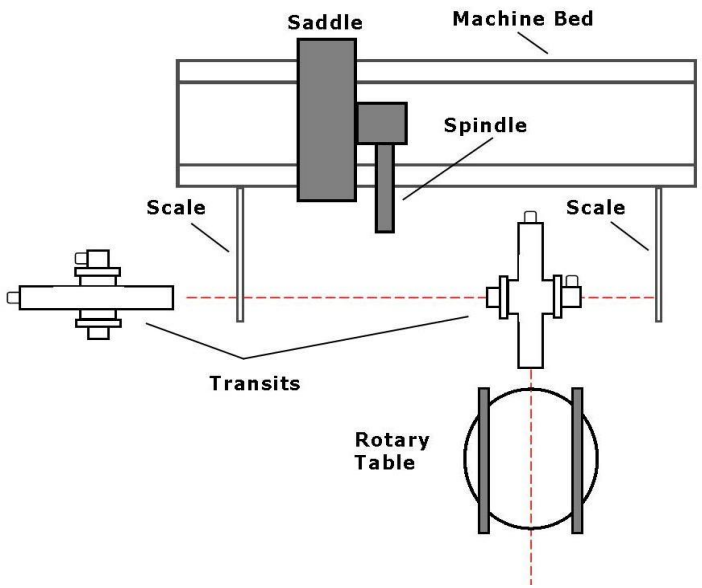

Figure 21: Machine tool inspection using optical methods.

Proper Procedures and Benefits

Alignment - particularly machine alignment - can be achieved by several methods, some of which may or may not be right for your specific application. Sometimes parallelism between specific components is adequate or even necessary, whereas at other times the overall machine alignment must be taken into account when considering the alignment of a component. The latter may also apply to the vertical attribute, or more commonly known as level. If almost every component of a machine is out of level but parallel, it is likely to be better to make the subject component the same rather than level. Material flow and stability as well as mechanical component longevity are benefits of proper web and sheet process machine alignment.

When it comes to shaft alignment, quite often perfection is not the best solution. If the alignment of a component affects the alignment of another in the machine train, then a best-fit solution is probably preferable. Quite often, a lot of time is exhausted trying to make coupling alignment near perfect when in reality the coupling characteristics and operating conditions allow for much more tolerance. That being said, understanding the effects and benefits of proper offset and angular misalignment of couplings in a machine train are key to proper alignment. Vibration and premature coupling and bearing failure result from improper shaft alignment.

Where geometry is critical to process, the first thing to ask is, “What is the tolerance of the geometric positioning?” If relative positions of components are less important than their actual alignment then perhaps a tape measure or an inclinometer is adequate to position those components in space prior to aligning them for parallel and level. If as much emphasis is weighted on the relative position of the components as with the alignment, then a more appropriate device to use would be a portable coordinate measurement machine such as a measurement arm or a laser tracker.

Given the right targeting, optical total stations can achieve this as well. Quite often the geometric position of machine components is critical for proper function. Linear or angular displacement, ballistic or fluid dynamic characteristics of material flow, pressing, stamping, embossing, and printing are all machine processes that rely and benefit greatly on proper geometric positioning.

Conclusion

There are many benefits to machine alignment, but having some knowledge of alignment can be of even greater benefit. A basic understanding of alignment techniques and results can better prepare industry professionals to respond to production and mechanical needs for machine alignment. Knowing why level is used, or what an offset baseline is will allow a maintenance manager to understand which methods are used and if they are appropriate for the immediate need. You do not always need the advice of professionals to form your own diagnostics. Given some fundamental knowledge and some basic instruments (level and tape measure), it is possible to detect some out of alignment conditions. Performing the corrective actions required to bring a machine back to alignment tolerances, however, does require more sophisticated instruments and a broader knowledge of that “black magic” that alignment technicians do.

The next time your production team calls for an alignment on the machine, ask yourself (or more importantly ask them) why they feel there is a need. Ask them what the symptoms are, what has changed in the machine, and when did it start. When you make your informed decision, consider the options. Do you want to simply debug the immediate problem at hand? Do you want to call in professionals to properly assess the overall alignment of the machine? Do you want them to recommend proper corrective actions and execute the work themselves? These are all important questions to ask prior to hiring an outside service provider.

As a final note, it is very important to remember that most alignment methods are contact measurement methods therefore, measuring while in operation is not practical and/or not precise enough. But more importantly, it is extremely unsafe.

For over 30 years, we at OASIS have dedicated our careers to providing quality and trusted machinery alignment services for our customers. We hope that this short manual has enlightened your understanding of some of the basic principles and reasons for machinery and industrial alignment.

Visit our website for more on machine alignment!

http://www.oasisalignment.com

Join our mailing list to receive future e-books and our bi-weekly blog updates